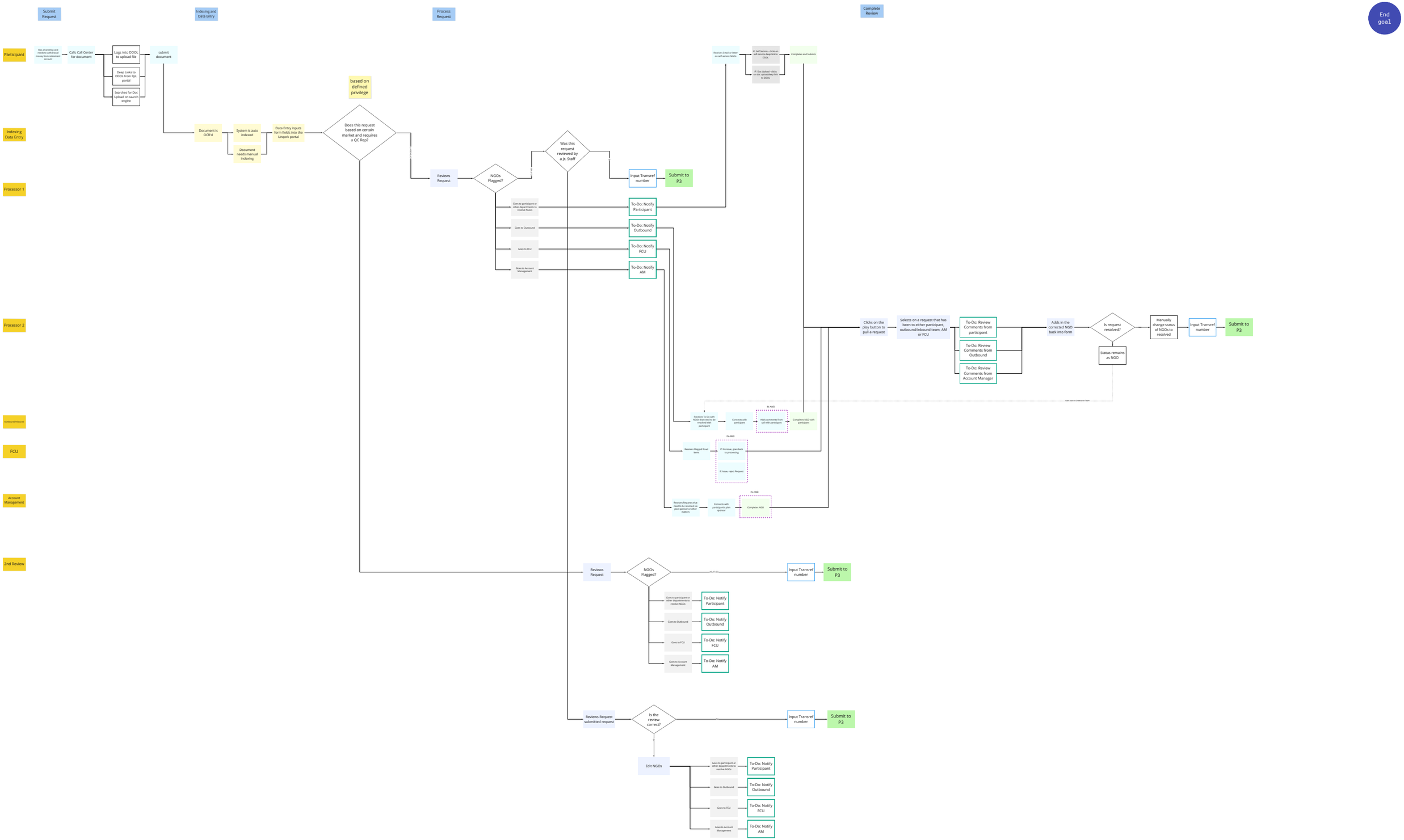
Submit Request
Indexing and Data Entry
Process Request
Complete Review
End goal
Participant
Indexing Data Entry
Processor 1
Processor 2
FCU
2nd Review
Has a hardship and needs to withdraw money from retirement account
Calls Call Center for document
Logs into DDOL to upload file
Deep Links to DDOL from Pjd. portal
Searches for Doc Upload on search engine
submit document
Document is OCR'd
System is auto indexed
Document needs manual indexing
Data Entry inputs form fields into the Unqork portal
Does this request based on certain market and requires a QC Rep?
based on defined privilege
Reviews Request
NGOs Flagged?
Was this request reviewed by a Jr. Staff
Input Transref number
Submit to P3
Goes to participant or other departments to resolve NGOs
Goes to Outbound
Goes to FCU
Goes to Account Management
To-Do: Notify Participant
To-Do: Notify Outbound
To-Do: Notify FCU
To-Do: Notify AM
Receives Email or letter on self-service NGOs
IF: Self Service - clicks on self-service deep link to DDOL
IF: Doc Upload - clicks on doc uploaddeep link to DDOL
Completes and Submits
Clicks on the play button to pull a request
Selects on a request that has been to either participant, outbound/inbound team, AM or FCU
To-Do: Review Comments from participant
To-Do: Review Comments from Outbound
To-Do: Review Comments from Account Manager
Adds in the corrected NGO back into form
Is request resolved?
Status remains as NGO
Manually change status of NGOs to resolved
Input Transref number
Submit to P3
Goes back to Outbound Team
Receives To-Do with NGOs that need to be resolved with participant
Connects with participant
IN AND
Adds comments from call with participant
Completes NGO with participant
Receives Flagged fraud items
IF: No-issue, goes back to processing
IF: Issue, reject Request
Receives Requests that need to be resolved via plan sponsor or other matters
Connects with participant's plan sponsor
Completes NGO
Reviews Request
NGOs Flagged?
Input Transref number
Submit to P3
Goes to participant or other departments to resolve NGOs
Goes to Outbound
Goes to FCU
Goes to Account Management
To-Do: Notify Participant
To-Do: Notify Outbound
To-Do: Notify FCU
To-Do: Notify AM
Reviews Request submitted request
Is the review correct?
Input Transref number
Submit to P3
Edit NGOs
Goes to participant or other departments to resolve NGOs
Goes to Outbound
Goes to FCU
Goes to Account Management
To-Do: Notify Participant
To-Do: Notify Outbound
To-Do: Notify FCU
To-Do: Notify AM
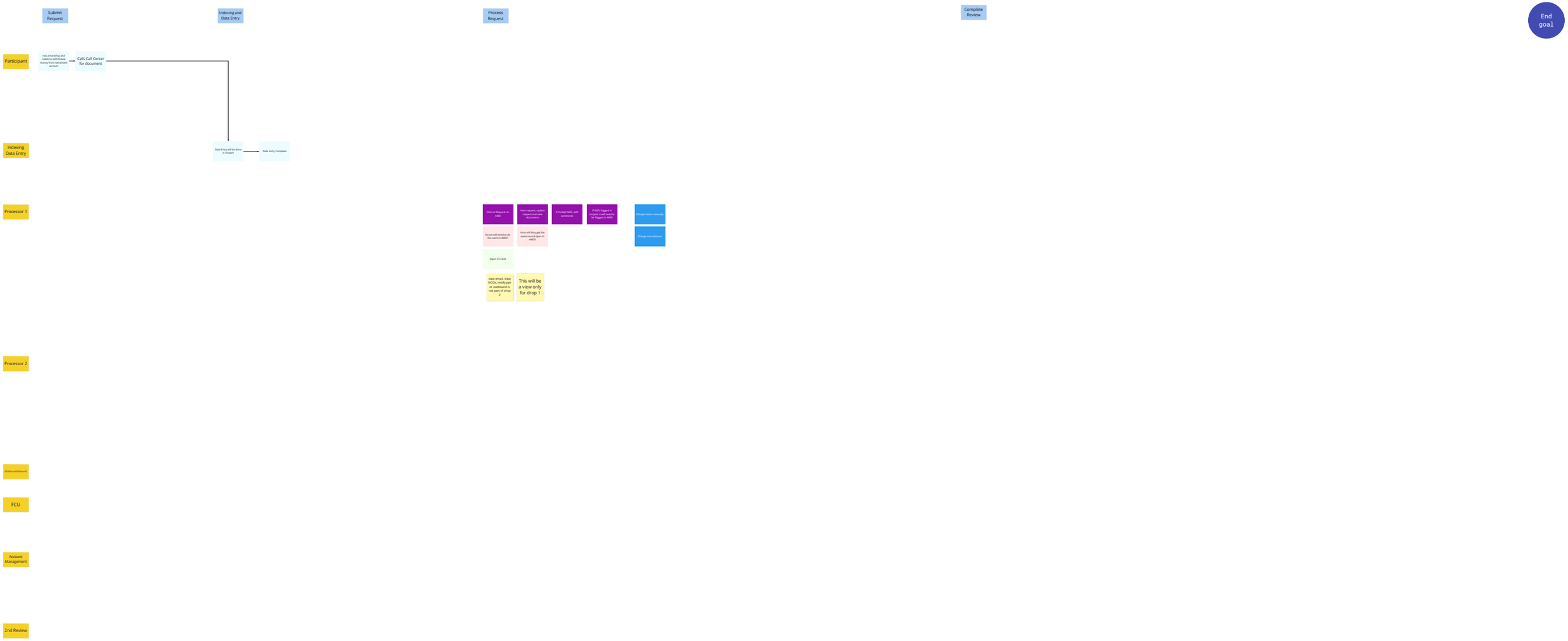
Reviewing Complex Requests - Journey Map